# Wunder-Bar Dispensing Systems

## 7 BUTTON PRE-MIX HANDLE WITH STANDARD CONNECTION OR COLD PLATE ICE SHIELD

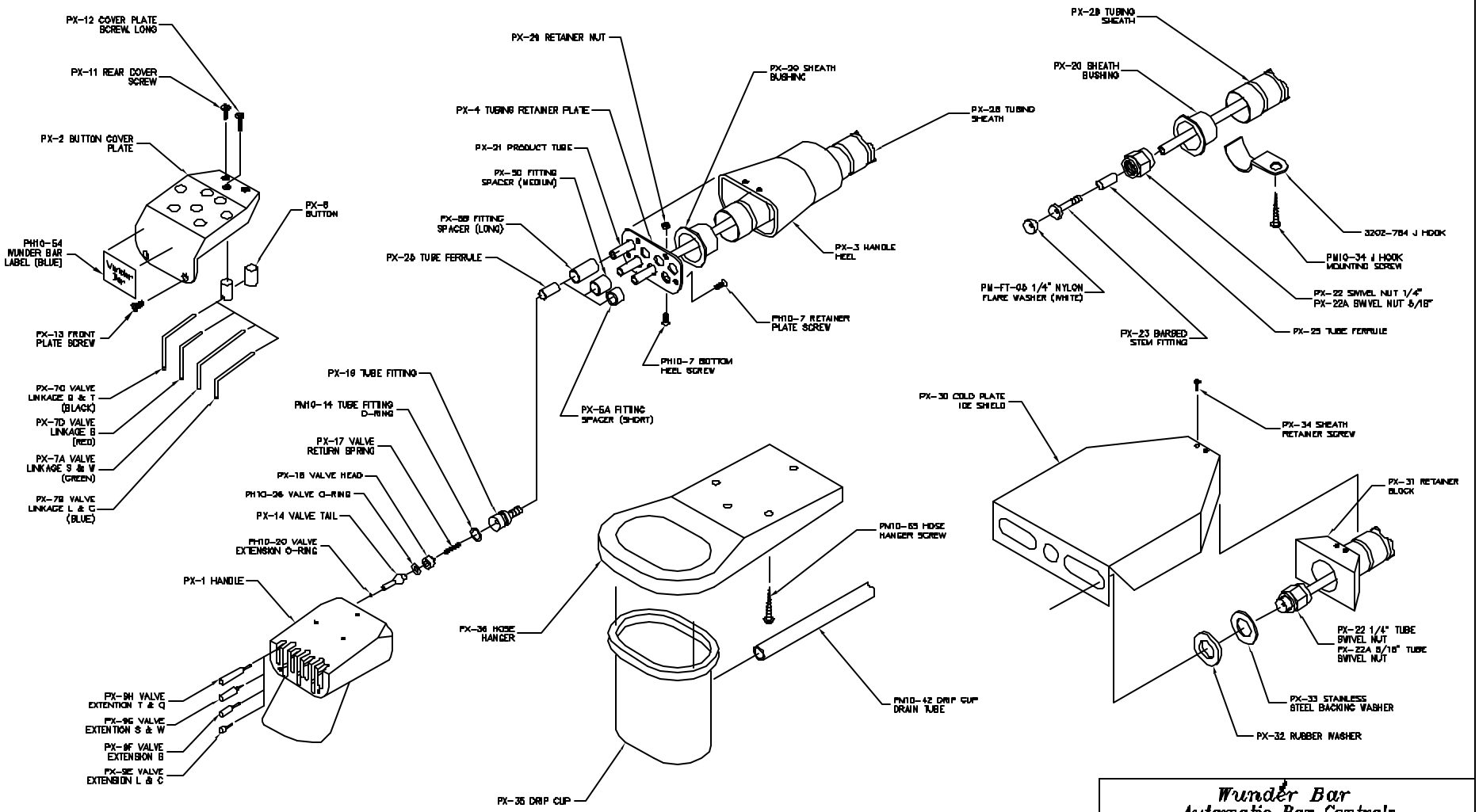



Wunder Bar
Automatic Bar Controls
www.wunderbar.com
790 Eubanks Drive
Vacaville, CA. 96688
PHONE: 707-448-5151 FAX: 707-448-1521


W:\06\0660001.DWG / 03-16-1999 / 4:22:22 PM