Wunder-Bar™

MARK 4 12-BUTTON POST MIX HANDLE AND STANDARD MANIFOLD

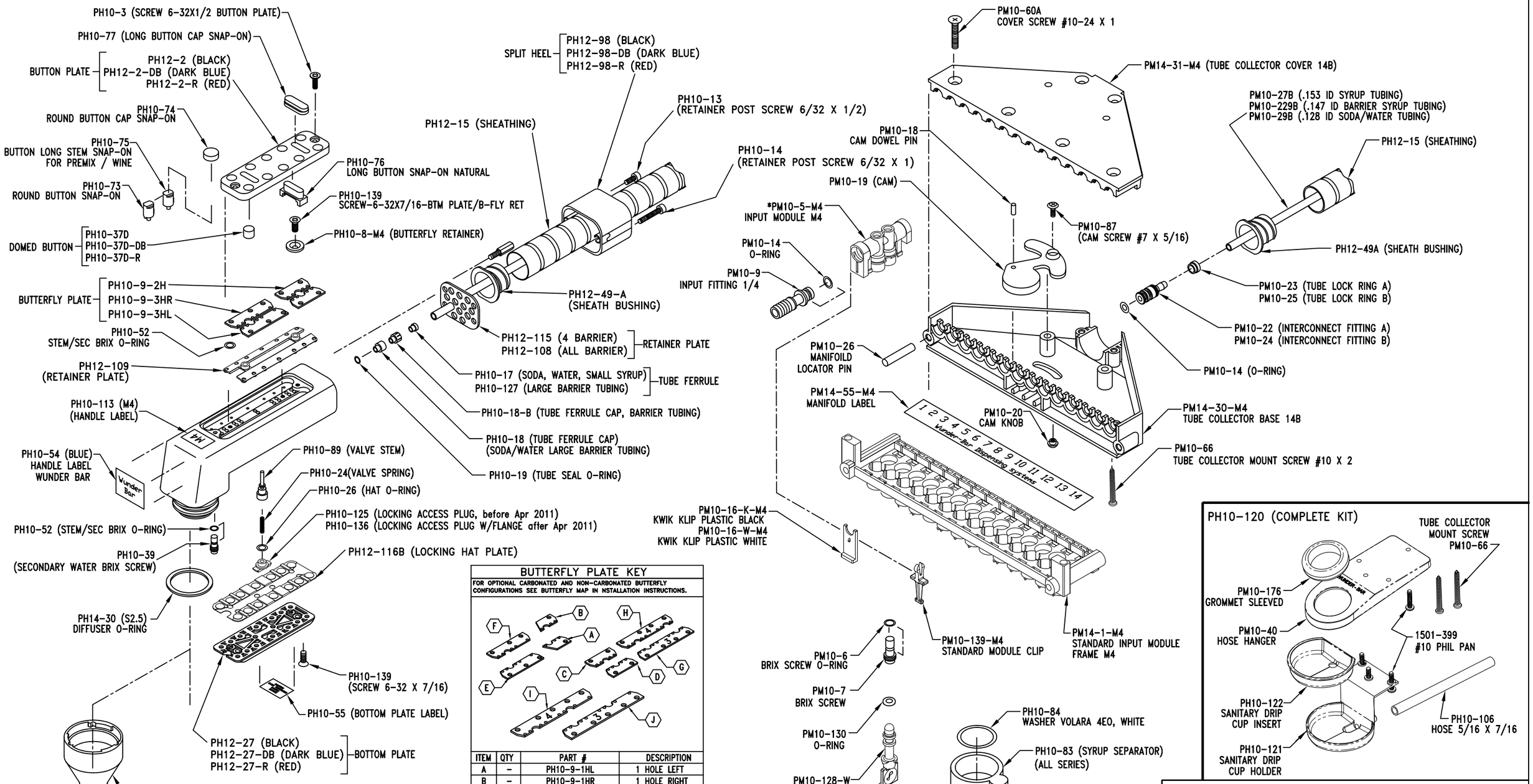

BUTTERFLY PLATE KEY

FOR OPTIONAL CARBONATED AND NON-CARBONATED BUTTERFLY CONFIGURATIONS SEE BUTTERFLY MAP IN NSTALLATION INSTRUCTIONS.

ITEM	QTY	PART #	DESCRIPTION
A	–	PH10-9-1HL	1 HOLE LEFT
B	–	PH10-9-1HR	1 HOLE RIGHT
C	–	PH10-9-2H	2 HOLE
D	–	PH10-9-2H	2 HOLE
E	–	PH10-9-3HL	3 HOLE LEFT
F	–	PH10-9-3HR	3 HOLE RIGHT
G	–	PH10-9-4H#3	4 HOLE LEFT
H	–	PH10-9-4H#4	4 HOLE RIGHT
I	–	PH10-9-5HLA14	5 HOLE LEFT
J	–	PH10-9-5HRA14	5 HOLE RIGHT

Automatic Bar Controls
www.wunderbar.com
2060 Cessna Dr, Suite 100
Vacaville, CA. 95688
PHONE: 707-448-5151 FAX: 707-448-1521

0560138B / 27 JUL 2017